

Spyke Base

Item code	**86.OS06.1073.02**
Product type	**Outdoor**
Category	**Spike Spot Light**
Family	**SPYKE**
Subfamily	**Spyke Base**
Pictograms	

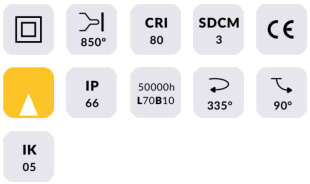

Dimensions	
Product dimensions (mm)	**ø80x128mm,H181mm**

Scheme

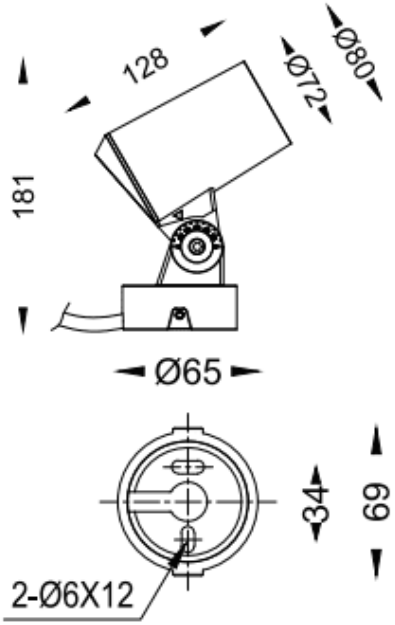

Product	
Real power (W)	**14**
Real luminous flux (Lm)	**224**
Luminous efficiency (Lm/W)	**16**
Beam angle (º)	**40º**
Life time (h)	**50000h L70B10**
IP	**66**
Electrical feeding	**24V DC**
Chip Brand	**CREE**
Control gear	**DALI**
Average life time (h)	**50000h L70B10**
Colour temperature (K)	**RGBW**
Colour consistency (SDCM)	**SDCM3**
CRI	**80**
IK	**IK05**